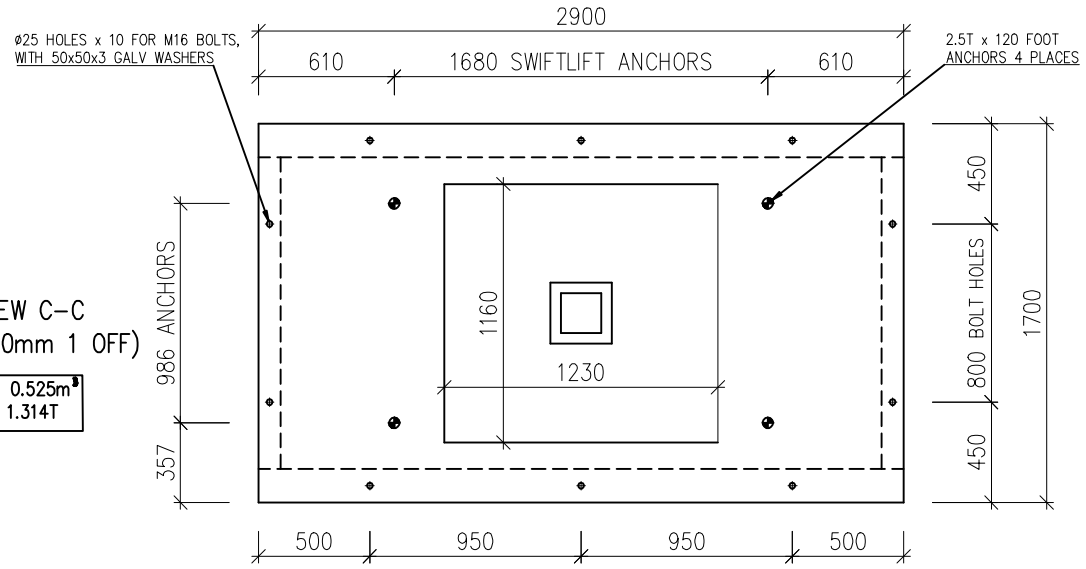

VIEW C–C
LID (150mm 1 OFF)

VOL: 0.525m³
WT: 1.314T

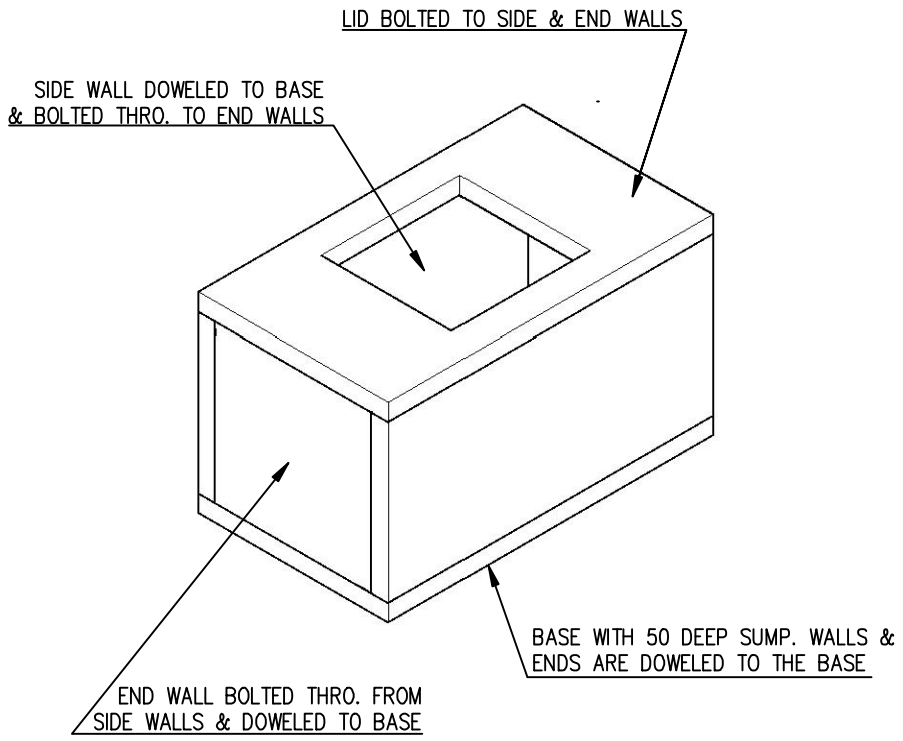

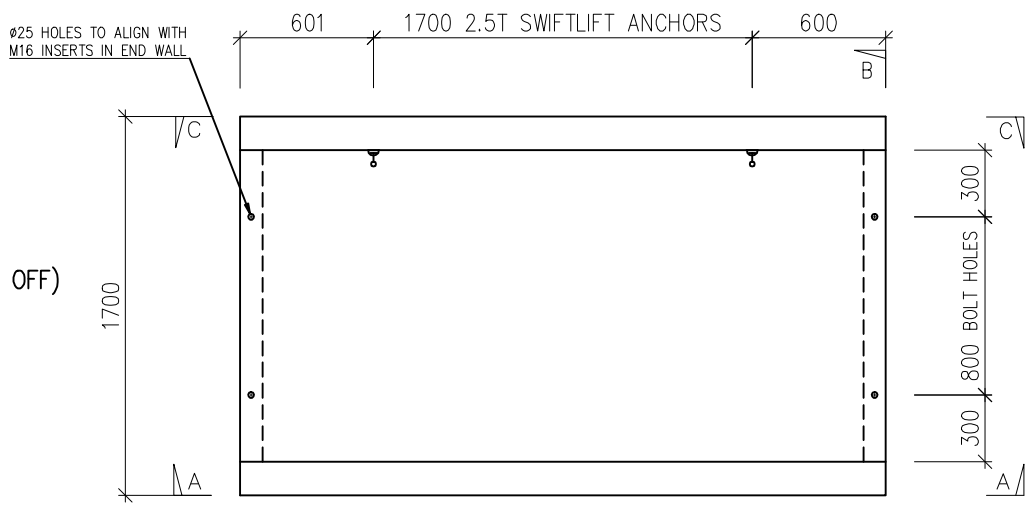

SIDE WALL (150mm 2 OFF)

VOL: 0.09m³
WT: 1.523T

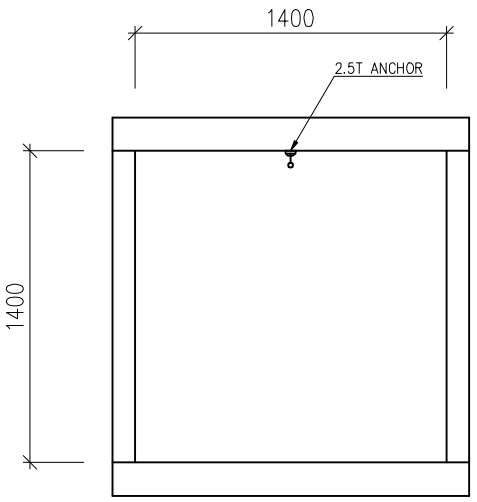

VIEW B–B
END WALL (100mm 2 OFF)

VOL: 0.196m³
WT: 0.49T

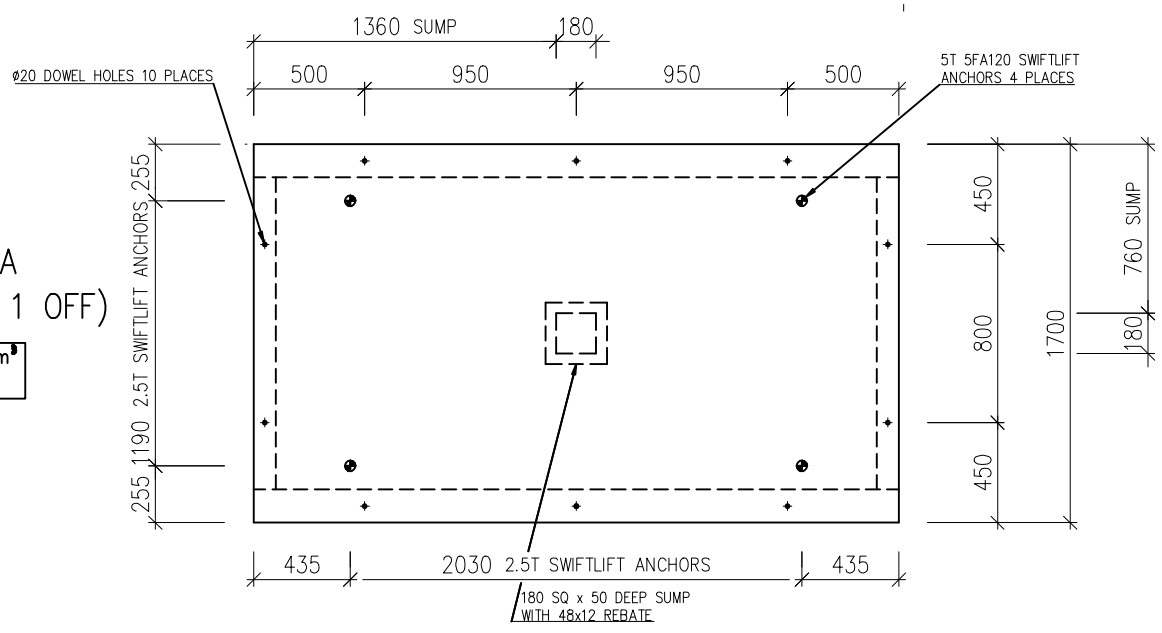

VIEW A–A
BASE (150mm 1 OFF)

VOL: 0.737m³
WT: 1.843T

NOTES:

1 MANUFACTURE IN ACCORDANCE WITH NZS 3109:1997 (PRECAST UNITS)

2 CONCRETE STRENGTH @ 28 DAYS 40MPa, MIN. STRIPPING STRENGTH 15MPa

3 REINFORCEMENT STEEL IN ACCORDANCE WITH NZS 3422 & NZS 3402 HD BARS = 430MPa & MESH = 485MPa

4 SURFACE FINISHES TO NZS 3114:1987, FORMED SURFACE – F4 FINISH & TROWELLED SURFACE – U2 FINISH

5 ALL JOINTS TO BE EPOXIED

6 FOR LIFTING OF COMPLETE UNIT (EXCLUDING LID) A FOUR POINT EQUALIESD SYSTEM USING THE 5T FA120 SWIFTLIFT ANCHORS ONLY SHOULD BE USED

Humes Pipeline Systems
Private Bag 92817
Auckland
Freephone 0800 502 112
www.humes.co.nz

Copyright: This design, information and drawing remain the property of Humes Pipeline Systems and may not be used or copied without approval in writing from Humes Pipeline Systems.

Contractor
HUMES
.
.
PHONE
WWW.

Rev	Description	Date	By	Chkd
A	FOR APPROVAL	21–4–09	GB	––
B	FOR CONSTRUCTION	22–4–09	GB	WA

Product INSPEC. CHAMBER	Details On SHEET 1 OF 2	Scales NTS	
Code 04701 .	Layout On SHEET NO.	Drawn GB	
Project Name . TELCO 2700x1400x1400 ROADWAY INSPECTION CHAMBER		Date	
		Checked By WA	
Dwg Title ELEVATIONS		04701–S1 Dwg. No.	B Rev.